SCREW AIR COMPRESSORS

DIESEL TO AIR SOLUTION

AIR DELIVERY:
30-1600CFM

WORKING PRESSURE:
7-35BAR

POWERLINK
Energy Systems
Power Link the World

AVAILABLE TYPES

Working pressure: 5~25Bar
Air delivery: 30~1589CFM
Pressure vessel standard: ASME, DIR, GB

SPIRIT TYPE (SMALL)

Air delivery:	30-200CFM
Working pressure:	7 Bar, 8 Bar,10 Bar
Engine brand:	Kubota, Powerlink, Cummins

EAGLE TYPE (MIDDLE)

Air delivery:	200-850CFM
Working pressure:	7-17 Bar
Engine brand:	Cummins, Kubota

HEAVY TYPE (BIG)

Air delivery:	730-1589CFM
Working pressure:	8-25 Bar
Engine brand:	Cummins

AIR COMPRESSOR

30~1589CFM

Reliable. Powerful. Durable.

MAIN COMPONENTS

Germany GHH Air end or equivalent

- Longer life
- High volumetric efficiency
- Low noise
- High load resistant

High quality Engine

- Emission standard up to Tier 3;
- Integral cylinder design reduces 25% parts than similar equipment;
- KUBOTA, DEUTZ, CAT, CUMMINS and PowerLink engine available.

Filter System

- Two stage air filtrations
- Remove 99.99% particles above 3 microns
- Automatic replacement reminder by PLC

Oil Separator

- Low oil content in output compressed air (3ppm)
- Low fuel consumption
- Low pressure drops
- Long maintenance cycle
- Automatic replacement reminder by PLC

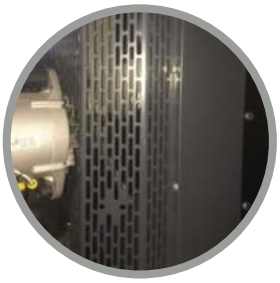

45 °C environment friendly enlarged Radiator

- oil-cooled water-cooled side-by-side cooling to achieve even cooling;
- Unique fin and channel design, good heat dissipation, easy to clean;
- Low-speed, low-noise axial fan;
- Vertical exhaust, optimize cooling effect

PLC Control System

- Microprocessor control;
- Monitoring operational parameters in real time;
- Parameters display, like engine speed, running time and discharge pressure etc;
- Multiple protections and alarm indicators;
- Automatic shutdown protection features for safe running.

Patented and 1-100% displacement friendly pipe system

- Large diameter pipe and short length — minimize internal pressure drop
- Soft hose —enhances vibration resistance; reduces noise
- SAE-O ring seals - the most effective seal prevention structure

AIR AND OIL PATH SYSTEM

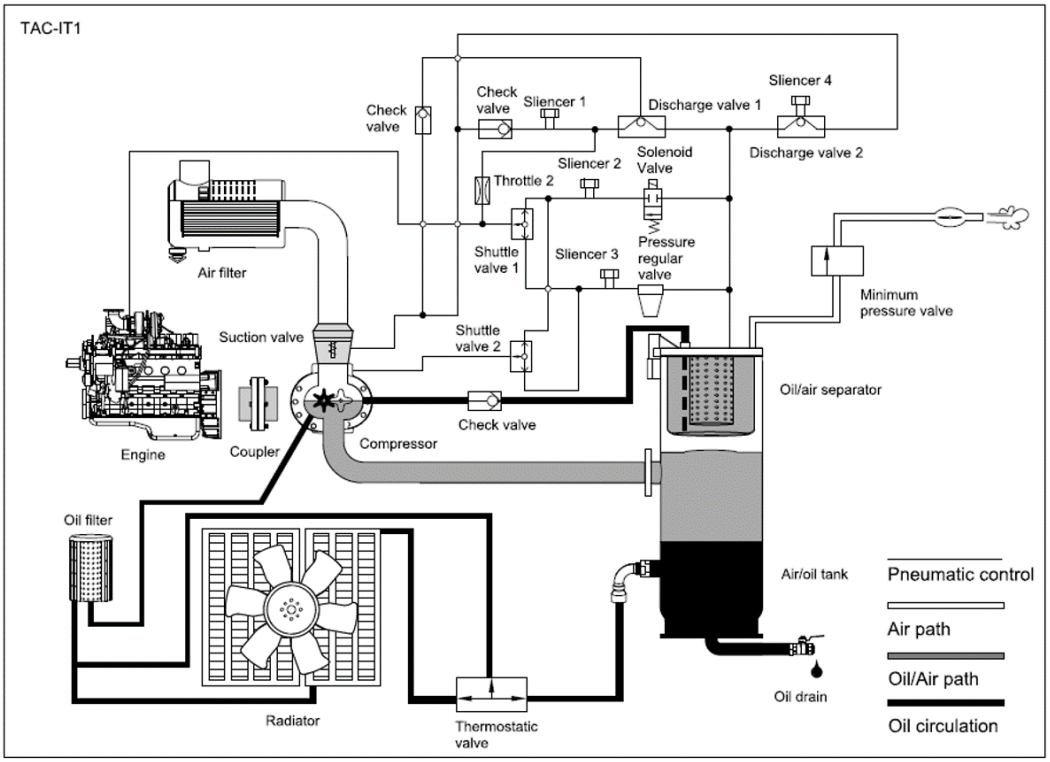

SPARE PARTS

For compressor	For engine
Consumable parts	Consumable parts
Air filter	Air filter
Lubricant oil filter	Engine oil filter
Oil/air separator	Engine oil
Lubricant oil	Fuel filter
Spare parts	
Air intake valve, Thermostat Valve, Minimum pressure valve, Solenoid valve	
Seal rings	

DR950-13
AIR COMPRESSOR

Rate of flow: 100-1525CFM

S/P = Stationary/Portable

Model	Air Flow		Pressure (Bar)	Engine			Powerlink head	Dimensions (mm)	Weight (KG)	Structure Type
	m³/min	cu.ft/min		Model	Model	KW				
DR950-13	26.78	945	13	DECE	6LTAA8.9-C360	256	AE950A13G	3900*1850*1400	3205	S/P

Reliable.
Powerful.
Durable.

PRODUCT CONFIGURATION

Standard configuration

Item	Unit	Quantity
Diesel engine	set	1
Air end	set	1
PLC control cabine	set	1
Intake valve	set	1
Oil/air vessel	set	1
Radiator	set	1
Fuel filter	set	1
Air filter	set	1
Oil filter	set	1
Oil/air separator	set	1
Fuel tank	set	1
Muffler	set	1
Battery	set	1
Coupling	set	1

Optional configuration

Item	Unit	Quantity
Jacket water preheater	set	1
Space heater	set	1
Trailer	set	1

Optional Trailer

Makes your air compressor portable and mobile

Trailer Type	Configuration
Road standard	Including tail light, tail light connector, tail light wiring harness and outrigger
Off-road standard	Including reflector, rubber sealing plug, outrigger, fender, block and fixed bolt.

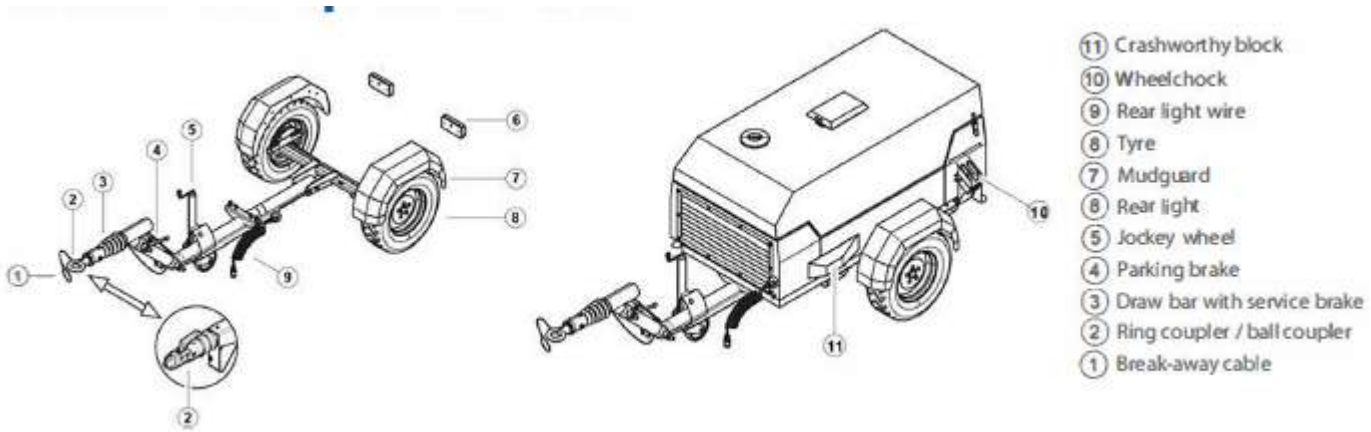

Mod
Goose neck type mob with adjustable traction height

Traction ring
The centroid of sing-axle trailer gen set lies in the front of axle, load of towing ring is 60-120kg.

Wheel and tyre
Adopt vacuum tyre

Service braking
Road standard ; Off-road standard

Ground clearance
Regarding intensive trailer, within 1 m range between front and back of axle, ground clearance is larger than 100mm.

As for discrete trailer, with respect to over 1 m distance between centers of two nearby axles, 33.33mm ground clearance should be increased for each exceeded 1 m.Ubi pra nost inprae que aur. Ahales periviris hic videnen atiur, nos etraelaritia tilibuntrei inatiam prox

Safety chain

Compressor Set Weight	Qty. of Safety Chain	Specification
ATM>2.ST	1	
2.ST <ATM< 3.ST	2	
3.5<ATM<4.3T	2	Chain Diameter ≥7. 1 mm andthe load of chain scission ≥ 6.4T;
4.3<ATM<4.ST	2	Chain Diameter ≥ 9.5mm, the load of chain scission ≥ 11.6T;

Draw bar
Safety Chain Linkage

- The chain won't link with trailer forever through hook;
- Safety chain linkage can independently bear the following external forces without causing transformation,flaw or breakage:
- Radial drawing force—1.Sx9.81 xATM (N};
- Vertical drawing force—O.Sx9.81 xATM (N};
- ATM—total weight of trailer and tractor when overloading.
- Parking braking
- No service braking for below 0.75T, mechanical braking for trailer from 0.75T to 3.ST;
- No hand brake for below 0.75T, as for above 0.75T, hanging and semi-hanging trailers are equipped with Parking braking and chock.
- Braking device must ensure reliable braking from up and down when trailer is on the 26% (15°) slope.
- Off-road standard trailer has no service braking.
- Trafficability
- Distance between base and floor is greater than 250mm;
- The angle between axle's front and rear parts and tangent surface and floor is larger than 19°.

POWERLINK
Energy Systems

www.powerlinkenergy.com